Total CAD/CAM Solution

ARUM Milling Machines
ARUM Consumables

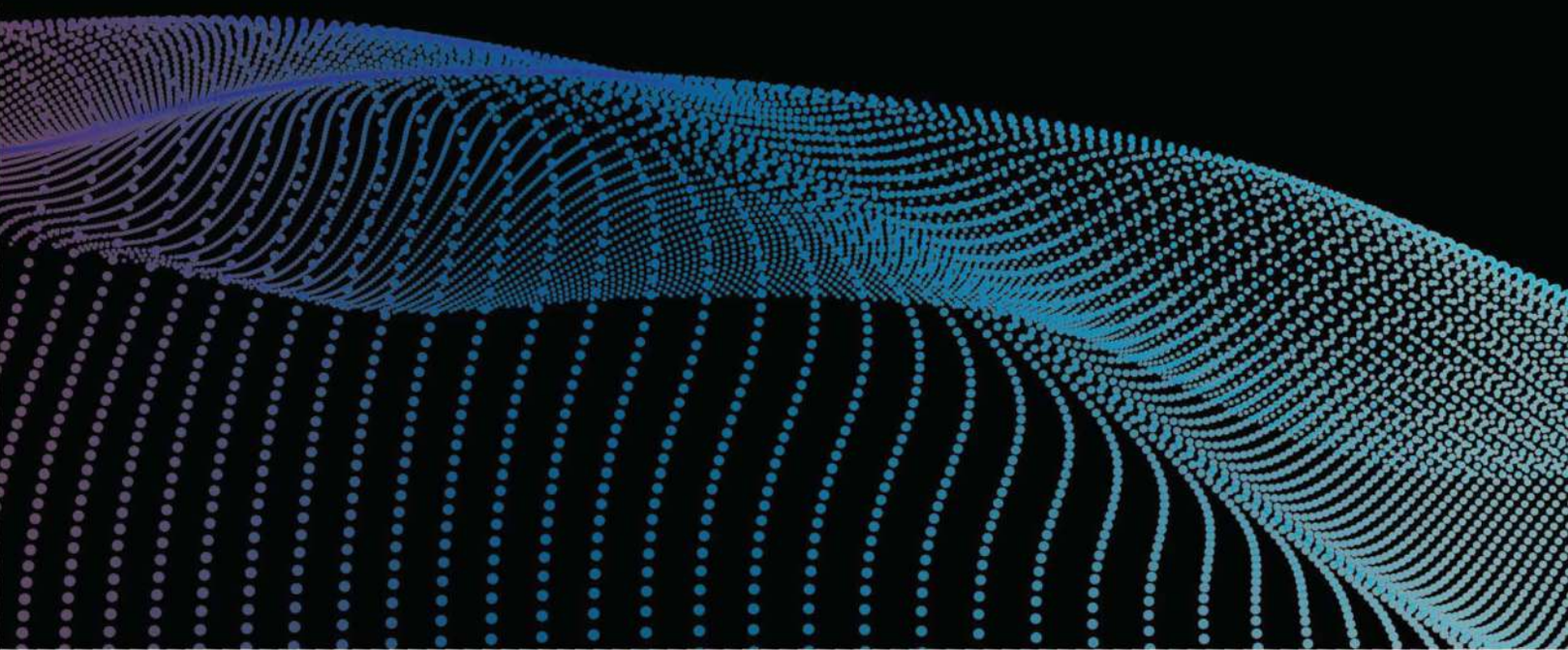

HIGH FUNCTIONALITY
EXCELLENT QUALITY FOR SOFT MATERIALS

The 5-axis chairside milling machine
for wet and dry machining.

ARUM
5X-300 series

Wet
Dry
C-Clamp
Built-in Compressor
Disk
CAD Block
5Axis
Auto Calibration

ARUM

ARUM
5X-300Pro

RPM
80,000

Wet | Dry | C-Clamp | Built-in Compressor
Disk | CAD Block | 5Axis | Auto Calibration

Maximise
Undercut Milling with C-Clamp

Proven Lithium Disilicate Milling

Open System

Efficient Space

Place dust collector, coolant system inside of the stand.

Minimise Noise
Built-in Air Compressor

12 ATC
(Automatic Tool Changer)

Easy to Clean

Simple to Change
Wet - Dry Milling

Materials & Applications Info.

Materials		Applications	
Lithium Disilicate	◎	Hybrid Abutment	◎
Nanocomposite	◎	Inlay & Onlay	◎
Zirconia	◎	Crown & Coping	◎
PMMA	◎	Crown & Coping Bridge	◎
PEEK	◎	Model	◎
Wax	◎	Bite Splint	◎
		Denture	◎

◎: High Compatibility / ○: Compatibility / X: Non-Compatibility

ARUM 5X-300Pro

Efficient C-TYPE JIG

Labial (or Buccal) side texture and undercut area precision processing minimize post-processing time.

All in One System

An external compressor is not required, and all additional devices (Dust Collector, Coolant System) are built inside the table to overcome installation space constraint and minimize noise.

Simple and easy material change

You can easily exchange from disk to CAD block as it uses cartridge type materials.

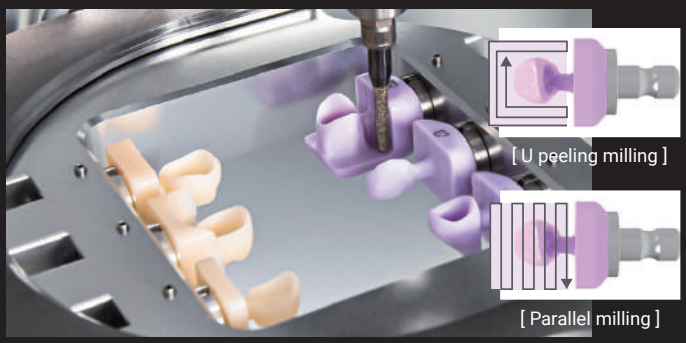

High speed 80,000 RPM

Specifications

Axis	5 Axis	Drive Mechanism		Ball Screw
Processing	Wet and Dry	Way System		Linear Guide
Spindle Power	AC 0.5kw	Machine Size (W*D*H)		568*638*645mm
Max. RPM	80,000	Total Size (W*D*H)		568*641*1583mm
A.T.C	12	Weight (Machine / Table)		90kg / 65kg
Tool Shank (mm)	Ø4	Travel	X,Y,Z axis	167*119.8*94mm
Motor	Stepping		A / B axis	±30˚ / 360˚

Tool List

Material	Code	Ø	Size	Material	Code	Ø	Size
Zirconia	ZB-46	2.0	D2.0*L18*50	Glass ceramic	DG-52	2.5	D2.5*L13*44.5
	ZB-47	1.0	D1.0*L16*50		DG-53	1.5	D1.5*L10*44.5
	ZB-48	0.6	D0.6*L10*45		DG-54	1.0	D1.0*L10*44.5
	ZB-65	0.3	D0.3*L12*45		DG-55	0.6	D0.6*L08*41
PMMA	MOB-56	3.0	D3.0*L20*50	Flat endmill	ZF-70	1.7	D1.7*L18*50
	PB-49	2.0	D2.0*L18*50		ZF-75	0.6	D0.6*L08*45
	PB-50	1.5	D1.5*L14*47	T-cutter	TC-80	1.8	D1.8*L08*45
	PB-51	1.0	D1.0*L10*44		TC-98	2.0	D2.0*L08*45

ARUM
5X-300D

RPM
60,000

Dry | C-Clamp | Disk | 5Axis | Auto Calibration

Excellent Expression of Detail

Groove and labial side texture precision machining using ARUM's exclusive 0.3mm tool for zirconia can be processed close to natural teeth.

Efficient C-Clamp

Built-in UI

Easy to operate.

Auto Calibration

Easy to maintain the machine for the beginner users.

Various tool options, 12 ATC (Automatic Tool Changer)

Simple and Easy to Install

Materials & Applications Info.

Materials		Applications	
Lithium Disilicate	X	Hybrid Abutment	◎
Nanocomposite	◎	Inlay & Onlay	◎
Zirconia	◎	Crown & Coping	◎
PMMA	◎	Crown & Coping Bridge	◎
PEEK	◎	Model	◎
Wax	◎	Bite Splint	◎
		Denture	◎

◎: High Compatibility / ○: Compatibility / X: Non-Compatibility

ARUM 5X-300D

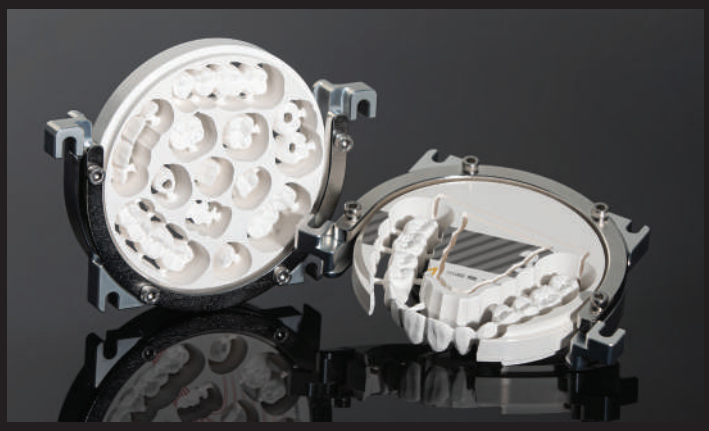

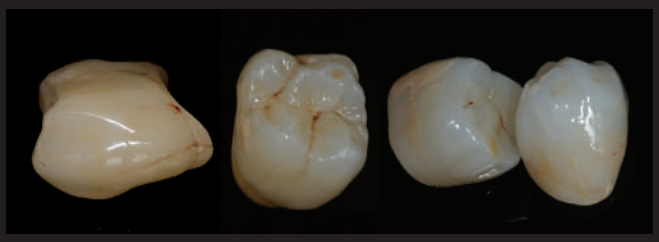

Efficient C-TYPE JIG

Labial (or Buccal) side texture and undercut area precision processing minimize post-processing time.

Like Natural Teeth

Every patient wants a prosthesis that looks natural. With milling the grooved part precisely using ARUM's 0.3mm tool for Zirconia, you can reproduce the teeth that look natural.

Specifications

Axis	5 Axis
Processing	Dry
Spindle Power	AC 0.5kw
Max. RPM	60,000
A.T.C	12
Tool Shank (mm)	Ø4
Motor	Stepping

Drive Mechanism		Ball Screw
Way System		Linear Guide
Machine Size (W*D*H)		568*638*645mm
Weight (Machine)		90kg
Travel	X,Y,Z axis	167*119.8*94mm
	A / B axis	±30˚ / 360˚

Tool List

Material	Code	Ø	Size	Material	Code	Ø	Size
Zirconia	ZB-46	2.0	D2.0*L18*50	Glass ceramic	DG-52	2.5	D2.5*L13*44.5
	ZB-47	1.0	D1.0*L16*50		DG-53	1.5	D1.5*L10*44.5
	ZB-48	0.6	D0.6*L10*45		DG-54	1.0	D1.0*L10*44.5
	ZB-65	0.3	D0.3*L12*45		DG-55	0.6	D0.6*L08*41
PMMA	MOB-56	3.0	D3.0*L20*50	Flat endmill	ZF-70	1.7	D1.7*L18*50
	PB-49	2.0	D2.0*L18*50		ZF-75	0.6	D0.6*L08*45
	PB-50	1.5	D1.5*L14*47	T-cutter	TC-80	1.8	D1.8*L08*45
	PB-51	1.0	D1.0*L10*44		TC-98	2.0	D2.0*L08*45

SMART AND SIMPLE SYSTEM FOR DENTAL LAB AND PRACTICE

The largest consumable system range in the world with the exceptional quality.

ARUM
Implant Prosthetic Component

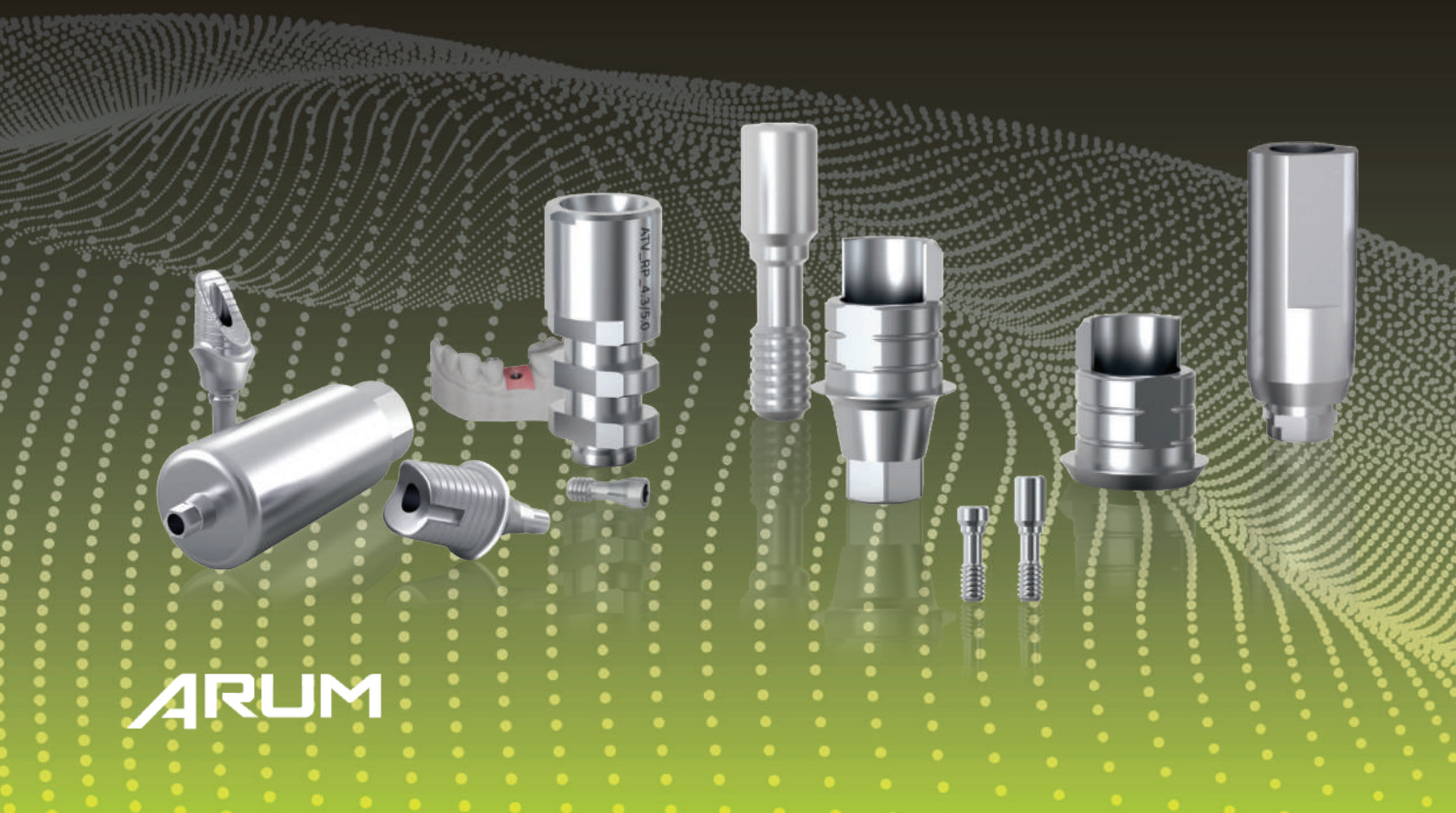

ARUM

Consumable Line-up

New system is updated regularly.
Please check the latest at our e-shop, www.arumdentalshop.com

A series	Compatible with
AB-IH	Alpha-Bio Tec® Internal Hex
AD-CLOS	ADIN® CLOSEFIT™
AD-TOU	ADIN® TOUAREG™ S&OS
AN	ANTHOGYR® Axiom
AT-EV	ASTRA TECH™ OsseoSpeed™ EV
AT-EVPRO	ASTRA TECH™ OsseoSpeed™ Profile EV
AT-OSS	ASTRA TECH™ OsseoSpeed™ TX

B series	Compatible with
BEG	BEGO®
BIC	BICON® Integra-CP™
BH-EXT	BIOHORIZONS® External®
BH-INT	BIOHORIZONS® Internal®
BM3I-INT	BIOMET 3i® Certain®
BM3I-EXT	BIOMET 3i® EXTERNAL
BT-BIK	BIOTECH®
BB-MYT	BrainBase Corporation® MYTIS Arrow Implant
BRM-SK	BREDENT Medical SKY®
BT-INT	BTI INTERNA®
BT-ENT	BTI EXTERNA®

C series	Compatible with
CAM	CAMLOG®
CL-CON	CLC Conic
CON	CAMLOG® CONELOG®
CRT	CORTEX™
CTE-EST	C-TECH® Esthetic Line
CWM-INT	COWELLMEDI® INNO Internal

D series	Compatible with
DP	DEEP®
DR-TIO	Dentaurum tioLogic®
DTS-ICL	DENTIS® i-Clean
DTS-SCL	DENTIS® s-Clean
DTM-NR	DENTIUM® NR Line
DTM-SIM	DENTIUM® SimpleLine
DTM-SPL	DENTIUM® SuperLine
DS-ANK	DENTSPLY® Ankylos® C/X Implant
DS-XIV	DENTSPLY® XIVE
DO-SM	DIO® SM
DO-UF	DIO® UF I & II Internal Submerged
DO-UFNS	DIO® UF II Internal Non Submerged
DYN-PUS	DYNA Pushin Octalock

E series	Compatible with
EB	EBI®
EU-AT	EUROTEKNIKA™ Aesthetica
EU-IN	EUROTEKNIKA™ Internal Naturactis/Naturall+/Natea+

G series	Compatible with
GLD-TEK	Global D® Tekka® In-Kone®

H series	Compatible with
HMT-RA	HumanTech RATIO

I series	Compatible with
ID-LEG	IMPLANT DIRECT® Legacy™
ID-IAT	IMPLANT DIRECT® Inter Active
ID-SAT	IMPLANT DIRECT® Swish Active
ID-PLU	IMPLANT DIRECT® Swish Plus
ID-TRI	IMPLANT DIRECT® Tri Lobe
IL-GB	INTRA-LOCK® GOLD&BLUE™

J series	Compatible with
JD-EV	J DENTAL CARE® JD EVOLUTION®
JD-ICO	J DENTAL CARE® JD Icon®
JD-OCT	J DENTAL CARE® JD EVOLUTION® Octa
JD-EVP	J DENTAL CARE® JD EVOLUTION® Plus

K series	Compatible with
KENT	KENTEC®
KS-PRI	KEYSTONE Prima Connex®
KYO-FBL	KYOCERA FINESIA® Bone Level
KYO-PO	KYOCERA Poiex

L series	Compatible with
LSK-BIO	LASAK Bioniq®

M series	Compatible with
MM-IC	Medentis Medical® ICX
MEG	MEGAGEN®
MEG-ONE	MEGAGEN® AnyONE
MEG-RID	MEGAGEN® Anyridge
MEG-EEP	MEGAGEN® Anyridge® Extra EZ POST
MEG-EZP	MEGAGEN® EZ Plus
MEG-MIN	MEGAGEN® Mini
MEG-RES	MEGAGEN® Rescue
MS-C	MIS® C1
MS-INT	MIS® Internal Hexagon

N series	Compatible with
NEB	NEOBIOTECH®
NED-CM	NEODENT®CM
NED-EXT	NEODENT® EXTERNAL
NED-GM	Neodent® GM
NOS-PA	NEOSS Pro Active®
NB-ACT	NOBEL BIOCARE® Active™
NB-BRA	NOBEL BIOCARE® Branemark®
NB-REP	NOBEL BIOCARE® Replace Select™
NCOS	NucleOSS

O series	Compatible with
OST-GS	OSSTEM® GS(TS)
OST-SS	OSSTEM® SS
OST-US	OSSTEM® US

P series	Compatible with
PLT-IV	PLATON® Type IV Pro

S series	Compatible with
SHN	SHINHUNG®
SC-INV	SIC Invent®
SI-DC	SOUTHERN IMPLANTS Deep Conical
SI-MSC	SOUTHERN IMPLANTS MSc External Hex
SI-INT	SOUTHERN IMPLANTS M-Series (Internal Hex)
SI-TRI	SOUTHERN IMPLANTS Tri Nex
STR-BL	STRAUMANN® Conical Bone Level®
STR-TL	STRAUMANN® synOcta®
SM-PK	Sweden&Martina Premium Kohno
SM-SH	Sweden&Martina Shelta
SM-PM	Sweden&Martina Prama

T series	Compatible with
TN-EXT	TITANIUM Fix External
THO-SPI	THOMMEN SPI®
TR-NI	TRI® Narrow Implants
TR-OCT	TRI® Octa
TR-VN	TRI® Vent

W series	Compatible with
WAR-ONE	WARANTEC® Oneplant

Z series	Compatible with
ZIA	ZIACOM®
ZMR-EZT	ZIMMER® Eztetic
ZMR-SP	ZIMMER® Swiss Plus
ZMR-SPA	ZIMMER® Spline A
ZMR-SPB	ZIMMER® Spline B
ZMR-TSV	ZIMMER® Tapered Screw-Vent®

Angled Ti-base

- Raw Material Ti 6Al-4V ELI (ASTM F 136) Supplied by Germany
- Industry's largest implant system compatibility
- Superior level of biocompatibility
- Combination of high fatigue strength

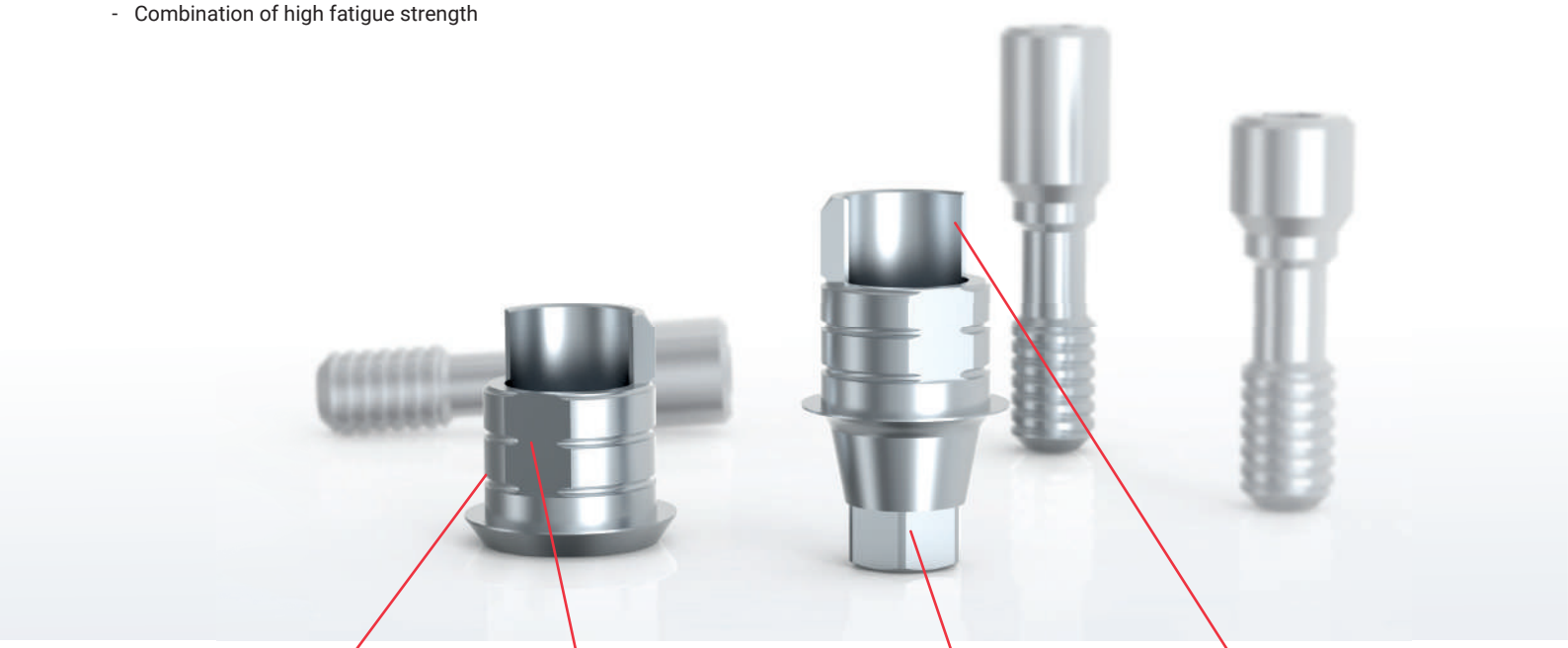

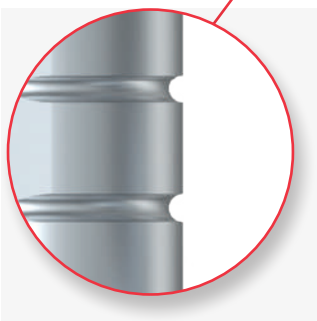

Exterior retentions for more cementa-tion bonding

The cut side surface and hex part surface in the image are same direction

Precision machined up to ± 5μm

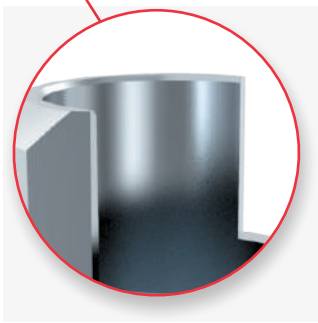

Prevention of zirconia rotation

2 Clinical Screws Included

Straight Screw

Same as the original screw design

Angled Screw

Digital Analog

- Raw Material Stainless Steel 303F
- Industry's largest implant system compatibility
- Precision machined up to ±5μm
- For 3D print & Stone model

ARUM Identification Code

compatible with
NOBEL BIOCARE® Active™ RP 4.3/5.0

ATV-RP-43/50

Stone Model

3D Print Model

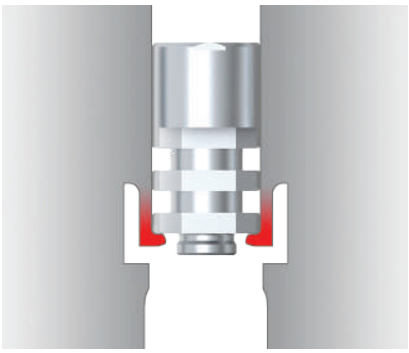

3D Print Model with Click System

Position Indicator
3D print & stone model

Antirotate Design

Level Stopper
for 3D print model &
stone model

Pre-milled Blank

- Raw Material Ti 6Al-4V ELI (ASTM F 136) Supplied by Germany
- Industry's largest implant system compatibility
- Securement of quality through full-scale inspection
- Precision machined up to ±5μm
- Diameter 10mm, 14mm

2 Clinical Screws Included

- Same as the original screw design

Diameter 10mm,14mm

We provide diameter of 10 and 14 mm for you to make Customized Abutments appropriate for various conditions of teeth. As they are compatible with more than 500 implant systems, you can machine using ARUM equipment.

Attachment

With use of Attachment, you can machine more sophisticated and near-perfect Customized Abutment.

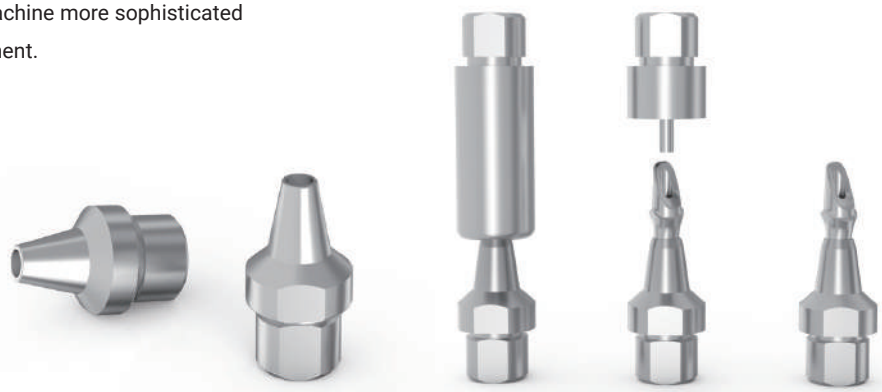

Healing Scanbody

- Raw Material Ti 6Al-4V ELI (ASTM F 136) Supplied by Germany
- Accurate tightening indicator “A Line”
- Easy and fast scan data matching
- Minimal gingival pressure and securement of gingiva

A Line

Indexes for the accurate fastening of implant fixtures and oral scan bodies and the prevention of the rotation of customised abutments.

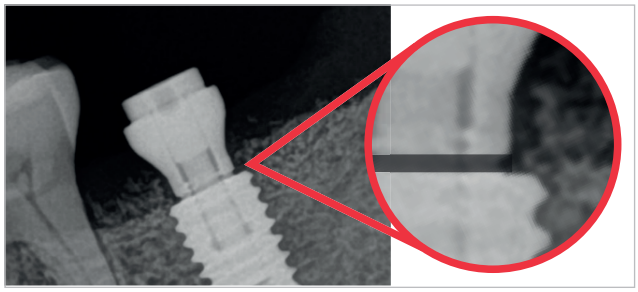

Easy and accurate matching

Easy and accurate scan data and library matching by nuts, D-cut and slope.

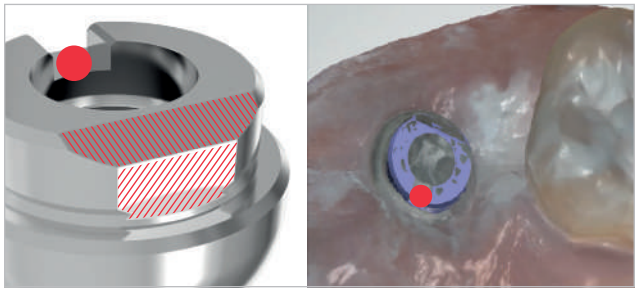

Concave Line

Concave Line to increase the completeness of dental procedure.
Minimization of gingival pressure.
Securement of thick gingiva.

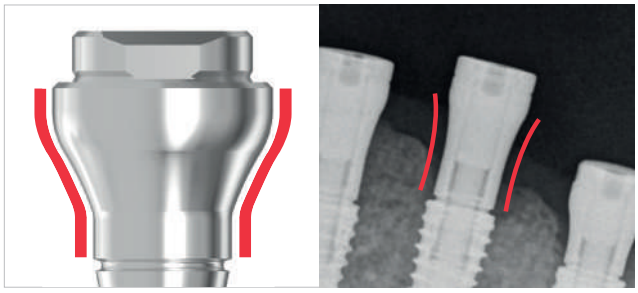

Healing Scanbody Holder

Easy connect to fixture with intraoral scanbody holder.
It is good for the complex case like molar procedure.
Possibility to select a suitable size with each different oral cavity.

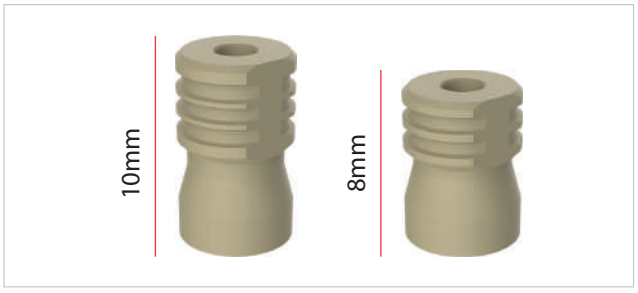

Model / Intraoral Scanbody

- Raw Material Stainless Steel 303F
- Supports with the industry's largest number of implant systems and libraries

Free Library setup by remote support

ARUM technical support team will securely setup the library files into your PC through a remote connection to start your design right away.

750+ Implant Connections

exocad | 3shape | dental wings

High Accuracy

WHY Arum scanbodies are METAL?

In comparison to PEEK, one can always rely on the exceptional precision and unparalleled wear-resistance from the metal scanbody.

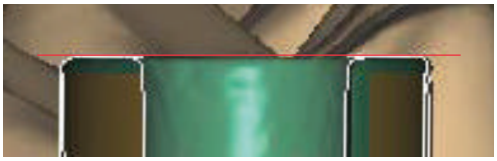

Arum Metal Scanbody

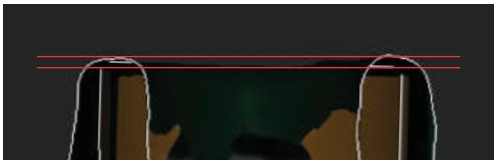

PEEK / Soft Material Scanbody

Screw

- Raw Material Ti 6Al-4V ELI (ASTM F 136) Supplied by Germany
- All hand inspection of thread
- Industry's largest implant system compatibility
- Precision and intensity of illumination
- Implement inspection with 150% value of original torque
- Same as the original screw design

Clinical Driver

- Use of Trimrite with excellent corrosion resistance
- Easy and simple cleaning
- For angled screw channels
- Heat treatment and hardness of 50 or more

[Ball Hex 8/15/22 mm]

[Ball Torx 8/15/22 mm]

Clinical Screw Driver tip (Machining type)

Ball Torx - 25mm

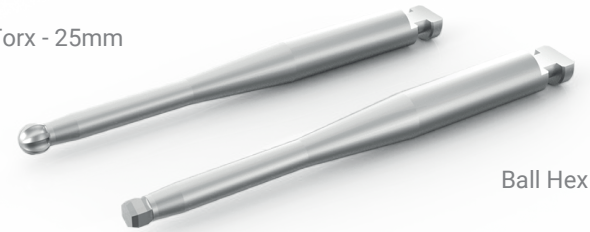

Ball Hex - 25mm

Lab Driver

Screw Driver Tips

- Place the model scanbody and the abutment
- 10 types of tips (compatible with the various implant systems)

Analog Insertion Tips

- Place the lab analog to 3D printed model
- Easy and safe to place the lab analog
- Prevent damage of the lab analog internal thread
- 5 types of tips (compatible with the various implant systems)

Torque Adapter

- For clamping Attachment and Premill for connectorless milling (with 0.4Nm torque)
- Prevent screw loosening during milling

Screw Driver Tips Line-Up

SIZE		COLOR	Compatible Implant System
	Hex 1.0	Blue	DENTIUM® NR Line / DENTSPLY® Ankylos® C/X Implant etc
	Hex 1.2	Purple	ADIN® TOUAREG™ S&OS/ANTHOGYR ANTHOFIT /BIOMET 3i®Certain/ BIOMET 3i® EXTERNAL HEX /BTI INTERNAL® / COWELLMEDI® INNO Internal / DENTIS® i-Clean / DENTSPLY® Xive® / DIO®UF / Global D® Tekka® In-Kone / MEGAGEN® AnyONE / MEGAGEN® Anyridge® /MEGAGEN® Anyridge® MEGAGEN®Extra EZ POST / MEGAGEN® EZ Plus / MEGAGEN® Rescue /NEOBIOTECH® / OSSTEM® GS(TS) /OSSTEM® SS / OSSTEM® US / SHINHUNG® / SIC Invent®/SOUTHERN IMPLANTS MSc EXTERNAL HEX / WARANTEC®Oneplant etc
	Hex 1.25	Black	BEGO® Semados/ BIOHORIZONS® External® / BIOHORIZONS® Internal® / DENTIS® s-Clean / LASAK Bioniq® etc.
	Hex 1.27	Red	ANTHOGYR AXIOM/Alpha-Bio Tec®Internal Hex / ASTRA TECH™ OsseoSpeed™ TX /CAMLO®CAMLO®/ CAMLOG®CONELOG® / CORTEX™ / DEEP® / DENTIUM® SimpleLine /DENTIUM® SuperLine / EBI®/ IMPLANT DIRECT®Legacy™ / MIS® C1 / MIS®Internal Hexagon./ ZIMMER®Spline A / ZIMMER®Spline B / ZIMMER®Tapered Screw-Vent® etc.
	Hex 1.3	Green	ASTRA TECH™ OsseoSpeed™ EV / CLC Conic / DYNA Pushin Octalock® / KENTEC® / PLATON® Type IV Pro / Sweden & Martina etc
	Torx 1.7	Brown	STRAUMANN® Bone Level ® / STRAUMANN® ConicalBone Level ® / STRAUMANN® synOcta® etc.
	Torx 1.5 (Star)	Yellow	ADIN® CLOSEFIT™ / NOBEL BIOCARE® Active™ / NOBEL BIOCARE® Branemark ® / NOBEL BIOCARE® Replace Select™ / NEOSS Pro Active® etc.
	Cross	Gray	THOMMEN SPI® etc
	Ball Torx	Orange	1. Most of angled screws of ARUM Ti-base (screw head size should be more than 2.1mm) 2. ALL IMPLANT SYSTEM FOR DISK ANGULATED SCREW CHANNELS
	Ball Hex	White	Some of angled screws of ARUM Ti-base (screw head size should be less than 2.1mm) *Please visit our website to see the list.

Analog Insertion Tips Line-Up

SIZE		COLOR	Compatible Implant System
	M2.0*P0.40	Cocoa	Osstem GS Regular, Dentium Super line, Megagen Anyone, Dentis S-clean, Straumann Tissue level, etc.
	M1.8*P0.35	Light Green	Zimmer TSV, Megagen Anyridge, Biohorizon Internal, Bego Semados, etc.
	M1.6*P0.35	Pink	Straumann Bone level, Osstem GS Mini, Nobel biocare Active Mini, Dentsply Xive, Neodent GM, etc.
	M1.4*P0.30	Sky Blue	Starumann Bone level 2.9, Dio UF Narrow, Megagen Mini, Astra YellowMost of Multi unit, etc.
	M2.5*P0.45	Ivory	Osstem US Wide, Nobel biocare Branemark WP, etc.

** Please aware of the color of tips.
** Contact us for a complete list of implant compatibility.

Torque Adapter

Torque	0.4 Nm

WE SHARE THE EXPERIENCE
with
PERFECTION

GET IN TOUCH

Arum 3D Solutions Ltd.

26C Lyon Road Walton-on-Thames
KT12 3PU
United Kingdom

+44 (0)207 388 1390
info@arumdental.com
www.arumdental.com

Scan me for whatsApp!